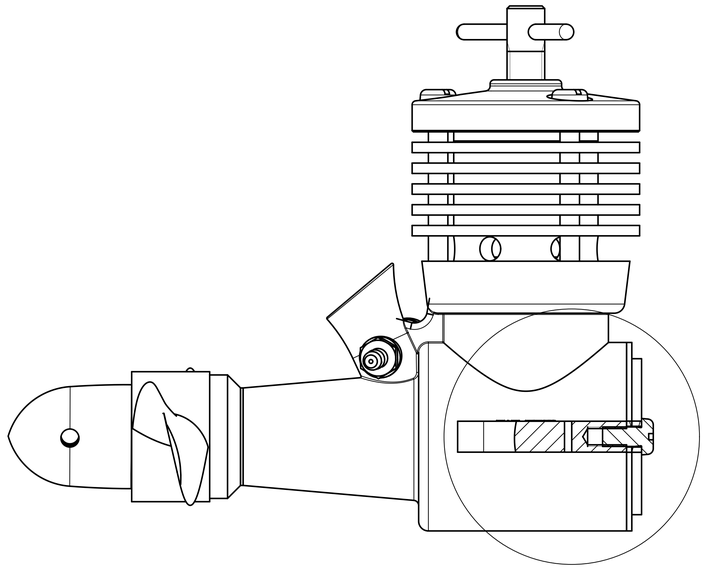

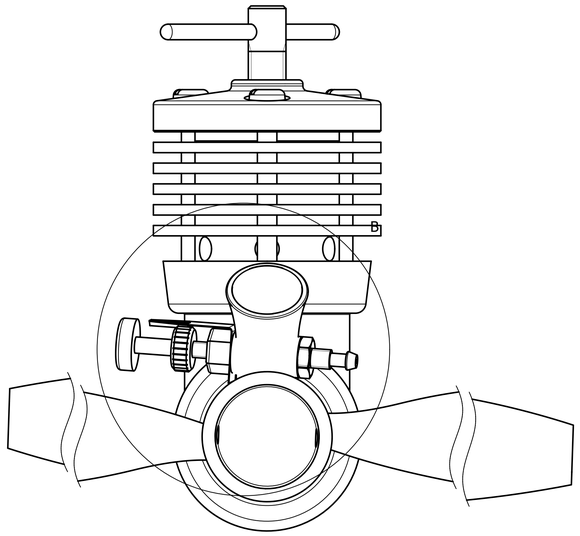

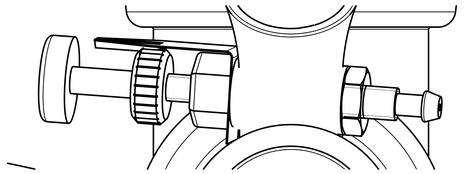

DETAIL B
SCALE 5:1

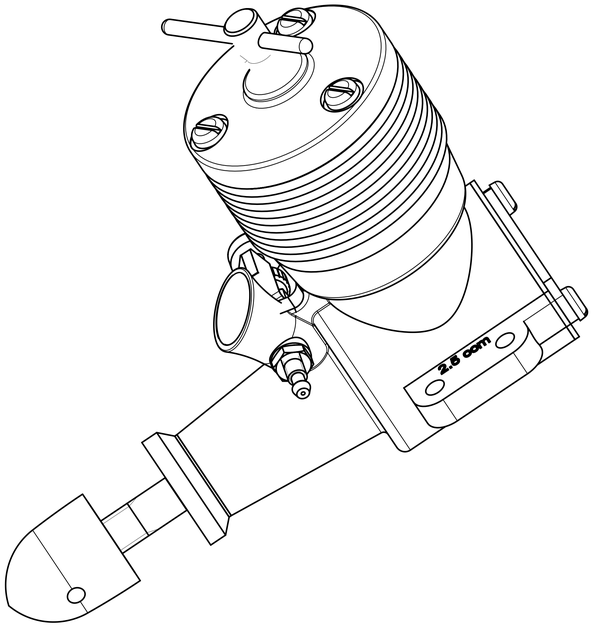

VIEW A

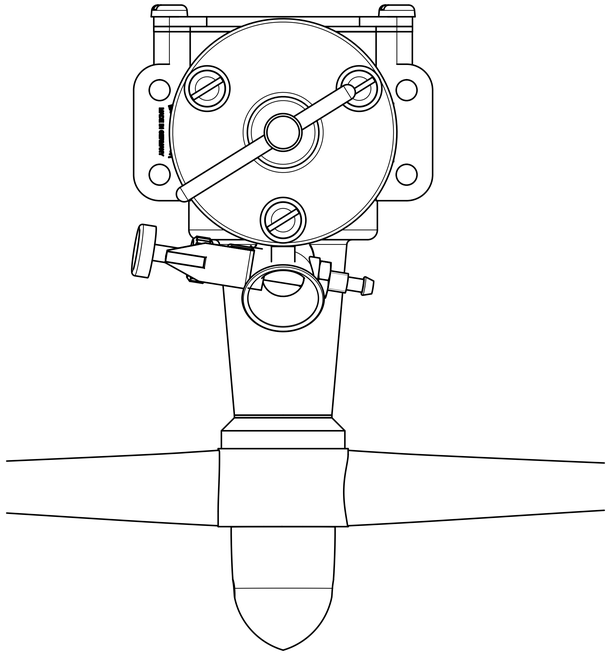

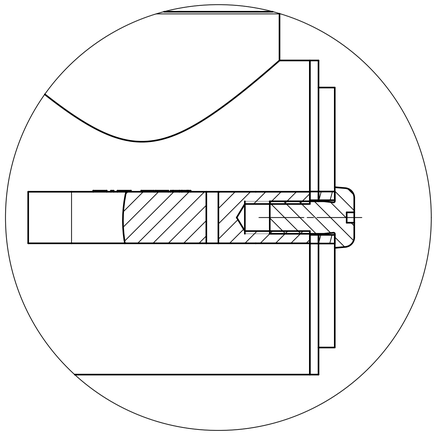

DETAIL C
SCALE 5:1

ALL DIMENSIONS IN mm

SIEMENS		THIS DRAWING HAS BEEN PRODUCED USING AN EXAMPLE TEMPLATE PROVIDED BY SIEMENS PLM SOFTWARE		
FIRST ISSUED	31.01.2019	TITLE		
DRAWN BY	V.Dietzel			
CHECKED BY	Herr Böckle			
APPROVED BY	Alfatraining	SIZE A0	DWG NO. Baugruppe_DMotore_dwg	SHEET REV A
		SCALE 2:1		SHEET 1 OF 1

A0